SALES & ENGINEERING DATA

RATIO SERIES:	20:1
FLUID P.S.I. RANGE:	600 - 2250

650875-XXE-C
EXTRUSION PUMP

RELEASED: 9-26-01
REVISED: 5-26-10
(REV. 02) S-1020

DIMENSIONAL DATA

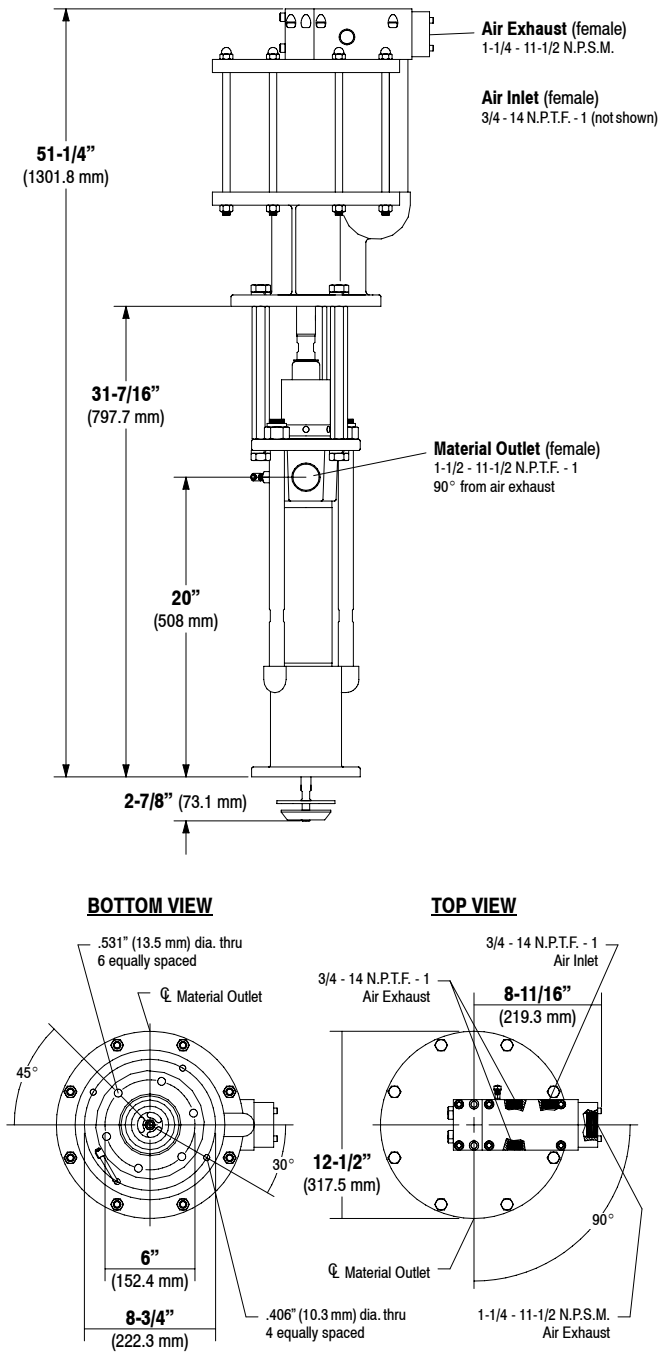

NOTE: Dimensions are shown in inches and (mm), supplied for reference only and are typically rounded up to the nearest 1/16 inch.

SPECIFICATIONS

CONSTRUCTION

Model Series (refer to option chart)	650875-XXE-C
Pump Type	Air Operated, Extrusion, Double Acting Pump
Ratio	20:1
Air Motor	66651-B
Motor Repair Kit	637110
Motor Diameter	10" (254.0 mm)
Stroke	6" (152.4 mm)
Air Inlet (female)	3/4 - 14 N.P.T.F. - 1
Air Exhaust (female)	1-1/4 - 11-1/2 N.P.S.M.
Lower Pump End Series	66236-XXE-B
Lower Pump Repair Kit	637128-XX4-B

Packing Options:

- 3 - Glass Filled PTFE
- C - UHMW-PE
- F - UHMW-PE / Leather staggered upper • UHMW-PE lower
- J - Polyurethane upper • UHMW-PE lower
- P - UHMW-PE / Glass Filled PTFE staggered upper • UHMW-PE lower
- R - Glass Filled PTFE / UHMW-PE staggered upper • Glass Filled PTFE lower

Material Outlet (female)	1-1/2 - 11-1/2 N.P.T.F. - 1

MATERIALS OF CONSTRUCTION

Outlet Body	Ductile Iron, Nickel plated
Cylinder	Carbon Steel, Nickel plated
Plunger	Carbon Steel, Chrome plated
Upper Check	440 Stainless Steel
Upper Seat	440 Stainless Steel
Lower Check	440 Stainless Steel
Lower Seat	440 Stainless Steel
Inlet Body	Malleable Iron, Nickel plated
Weight	144 lbs (65.3 kgs)

PERFORMANCE

Air Inlet Pressure Range	30 - 90 p.s.i. (2.1 - 6.2 bar)
Fluid Pressure Range	600 - 2250 p.s.i. (41.4 - 155.2 bar)
Maximum Rec'd Cycles / Minute	70
Displacement In^3 Per Cycle	40.4
Volume / Cycle	22.4 oz. (661.8 ml)
Cycles Per Gallon	5.7
Flow @ 60 Cycles / Minute	10.5 g.p.m. (39.7 l.p.m.)
Noise Level @ 60 p.s.i. - 40 c.p.m.	84.8 db(A)①

① Tested with 66718 Muffler installed. The pump sound pressure level has been updated to an Equivalent Continuous Sound Level (L_{Aeq}) to meet the intent of ANSI S1. 13-1971, CAGI-PNEUROP S5.1 using four microphone locations.

ACCESSORIES:

65139 Floor Mount
66542 Wall Mount Bracket
66718 Silencer

INGERSOLL RAND COMPANY LTD
209 NORTH MAIN STREET – BRYAN, OHIO 43506
(800) 495-0276 • FAX(800) 892-6276
www.ingersollrandproducts.com

© 2010
CCN 15269012

ARO
Ingersoll Rand
Industrial Technologies
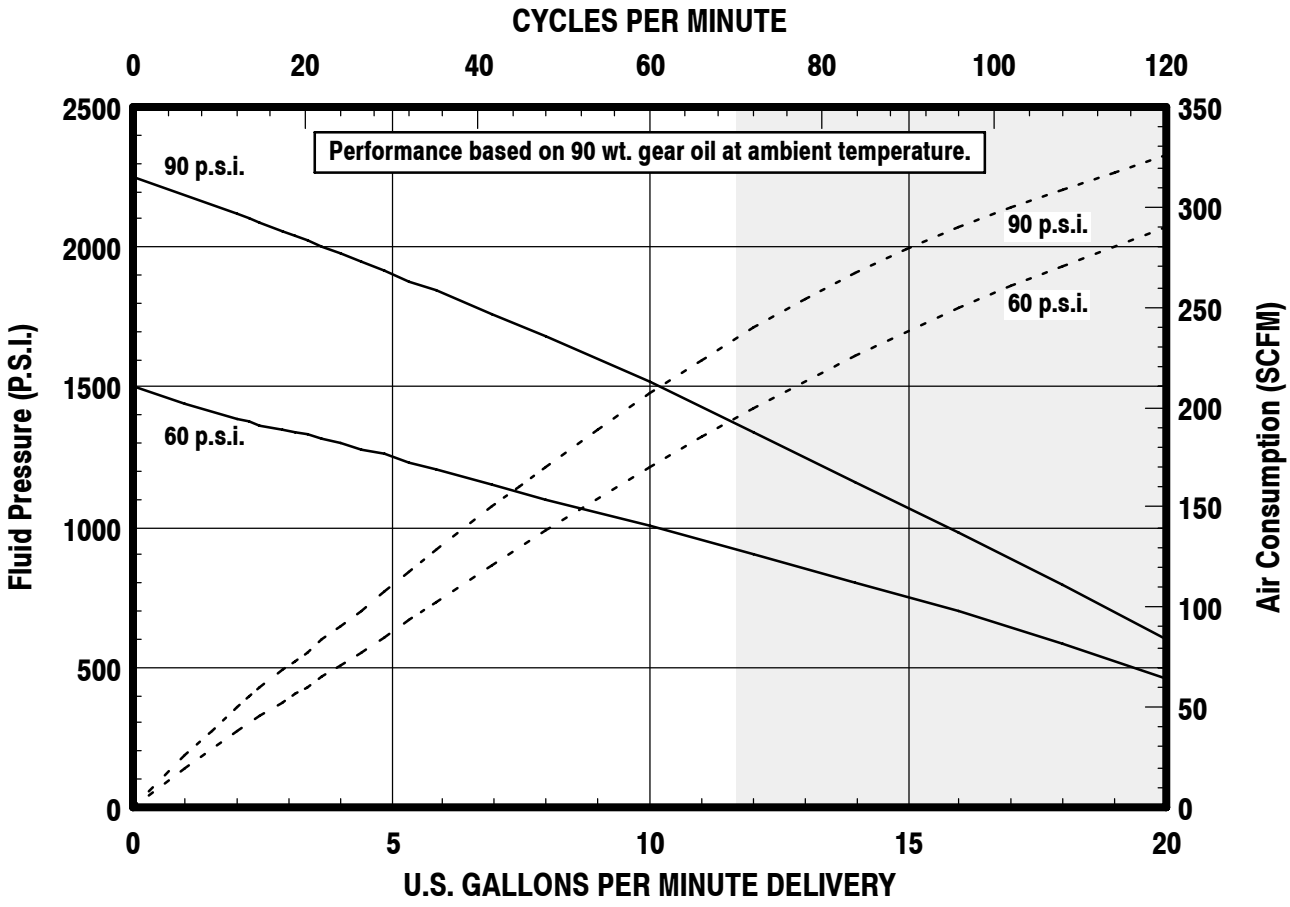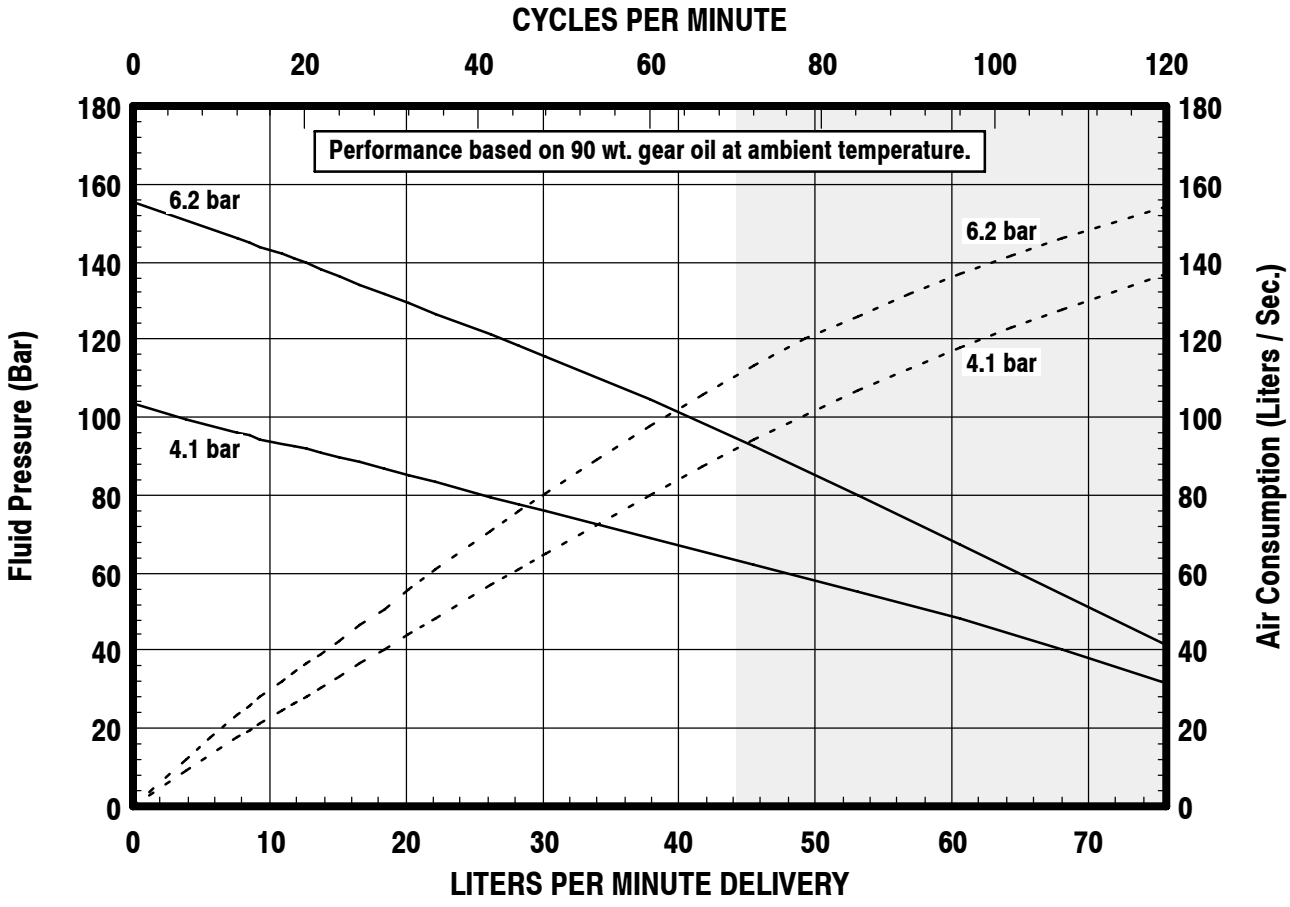
PERFORMANCE CURVES