Blue-White® Industries, Ltd.

FLEXFLO® Peristaltic Metering Pumps

Engineering and Technical Data

A-100NC

Fixed Speed

Dial Knob Control

5 second cycle timer

TFD system Tube Failure Detection

Features:

- **Peristaltic pump design does not have valves that can clog requiring maintenance.**
- **Self priming - even against maximum line pressure. By-pass valves are not required. Cannot vapor lock or lose prime.**
- **Outputs to 250 ml/min (95.1 GPD).**
- **Output pressures to 100 PSI.**
- **Output volume is not effected by changes in back pressure.**
- **Patented pump tube design installs easily and stays centered on the rollers without manual adjustment.**
- **Two pump tubes supplied with each pump. No extra tubing required.**
- **Easy to use dial knob output control.**
- **20:1 turndown ratio.**
- **Adjustable 5 second repeating interval timer. 0.25 - 5.0 second adjustable on time per 5 second cycle.**
- **Built-in Tube Failure Detection system (TFD). Senses chemical in the pump head, shuts off the pump and activates an NPN open collector output.**
- **Compatible with Blue-White's output flow verification sensor system.**
- **Durable housing of chemical resistant Valox (PBT) thermoplastic.**

Specifications:

Max. working pressure: .....100 psig (6.9 bar)
Max. fluid temperature: .....130° F (54° C)
Max. ambient temperature: ..14° to 110° F/ -10° to 43° C
Output adjustment range: 5-100%
Duty cycle:.....Continuous
Maximum viscosity:.....5,000 Centipoise
Maximum suction lift: .....30 ft. Water 0 psig
Maximum Solids: .....50% by volume
Enclosure: .....NEMA type 2, (IP21)
Approximate shipping wt: ...10 lb. (4.5 kg)

Voltage (max amp): .....115VAC/60Hz, 14 & 30 rpm = 1.37 amp
45 & 60 rpm = 1.87 amp
230VAC/60Hz, 14 & 30 rpm = 0.64 amp
45 & 60 rpm = 0.74 amp
220VAC/50Hz, 14 & 30 rpm = 0.68 amp
45 & 60 rpm = 1.14 amp
240VAC/50Hz, 14 & 30 rpm = 0.66 amp
45 & 60 rpm = 1.04 amp
Power Cord Plug Type:.....115V60Hz = NEMA 5/15 (USA)
230V60Hz = NEMA 6/15 (USA)
220V50Hz = CEE 7/VII (EUROPE)
240V50Hz = CEE 7/VII (U.K)

Materials of Construction:

Wetted components:

Pump Tube Assembly:.....Norprene®, Tygothane® or Viton® tubing
PVDF tube assembly connection fittings
Suction Tubing:.....Clear PVC
Suction Strainer:.....Natural Polypropylene
Discharge Tubing:.....Natural Polyethylene (LLDPE)
Injection/Check valve:
Body & insert: .....Polypropylene (optional PVDF)
Check Ball: .....Ceramic
Spring: .....Hastelloy C-276
Ball Seat O-ring:.....TFE/P (optional EP)
Static Seal O-ring: .....Viton® (optional EP)

Non-Wetted components:

Pump Head & Enclosure: .....Valox® (PBT) thermoplastic
Pump Head Cover:.....Clear PVC
Cover Screws:.....300 Stainless, Polypropylene cap
Roller Assembly:
Rotor:.....Valox® (PBT)
Rollers: .....Nylon
Roller Bearings: .....Bronze
Motor Shaft:.....Nickel plated steel
TFD System Sensor pins: ....Hastelloy C-276
Power Cord: .....3 conductor, SJTW-A Water-resistant

Blue-White Industries, Ltd.

FLEXFLO® Peristaltic Metering Pumps

Dimensions:

Base Mounting

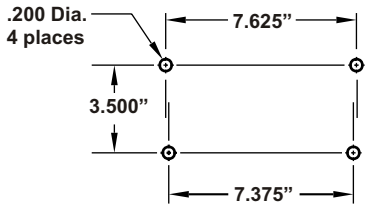

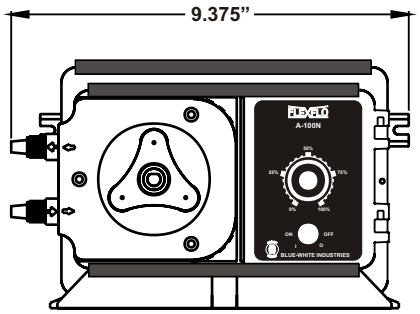

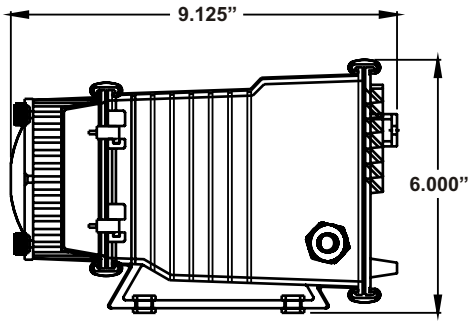

Rear Panel Mounting

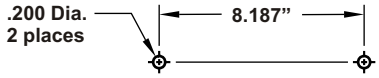

Model Number Matrix:

MODEL A1N [ ][ ] C - [ ][ ] - [ ]

Maximum Motor RPM
- **0** = 14 RPM
- **1** = 30 RPM
- **2** = 45 RPM
- **3** = 60 RPM

Power Supply
- **0** = 115V60Hz
- **1** = 220V50Hz*
- **2** = 230V60Hz
- **8** = 240V50Hz

Output Control
- **C** = Analog timer, 5 sec. Cycle - 100% duty
- **A** = Analog timer, 60 sec. Cycle - 100% duty
- **S** = Analog timer, 60 sec. Cycle - 10% duty
- **V** = Digital speed control with external input
- **F** = Analog speed control
- **E** = Digital batch timer with external input
- **Z** = Proportional feed system - JBox/Cord
- **X** = No output control - fixed feed rate

Miscellaneous Options (not required)
- **1** = TI40-6V injector replaces A-014HD-6A
- **2** = C-340V footvalve replaces C-342-6 strainer
- **5** = A-014HDK-6A injector PVDF
- **T7** = 7 gallon chemical tank system
- **T15** = 15 gallon chemical tank system
- **T30** = 30 gallon chemical tank system

Tubing Connection Type
- **T** = Compression tube nuts
- **Q** = Push-on quick connect

Pump Tube Size and Material
- **1** = 1/4” OD Tygothane
- **2** = 3/8” OD Tygothane
- **3** = 7/16” OD Tygothane
- **4** = 1/4” OD Norprene
- **5** = 5/16” OD Viton
- **6** = 3/8” OD Norprene
- **7** = 7/16” OD Norprene

Maximum Flow rate and pressure capacities:

Tube no.	Tubing Material	14 RPM MODELS					30 RPM MODELS					45 RPM MODELS					60 RPM MODELS				
		ml/min	oz/min	gph	gpd	PSI	ml/min	oz/min	gph	gpd	PSI	ml/min	oz/min	gph	gpd	PSI	ml/min	oz/min	gph	gpd	PSI
1	Tygothane	15	0.51	0.24	5.7	65	35	1.18	0.55	13.3	65	54	1.83	0.86	20.5	65	67	2.26	1.06	25.5	65
2	Tygothane	32	1.08	0.51	12.2	65	75	2.54	1.19	28.5	65	115	3.89	1.82	43.7	65	140	4.73	2.22	53.2	65
3	Tygothane	73	2.47	1.16	27.8	50	173	5.85	2.74	65.8	50	261	8.82	4.14	99.2	50	326	11.01	5.17	124.0	50
4	Norprene	6	0.20	0.10	2.3	100	13	0.44	0.21	4.9	100	21	0.20	0.10	8.0	100	25	0.85	0.40	9.5	75
5	Viton	11	0.37	0.17	4.2	25	26	0.88	0.41	9.9	25	39	1.31	0.62	14.8	25	48	1.62	0.76	18.3	25
6	Norprene	18	0.61	0.29	6.8	100	42	1.42	0.67	16.0	100	63	2.13	1.00	24.0	100	79	2.67	1.25	30.0	75
7	Norprene	57	1.92	0.90	21.7	50	138	4.66	2.19	52.5	50	200	6.76	3.17	76.1	50	250	8.45	3.96	95.1	50

*** NOTE: 50Hz units deliver 20% less output.**

Replacement Pump Tubes:

Pump Model Number Suffix	Pump Tube Part Number	Pump Tube Material	Nominal Pump Tube OD
-1T	A-002N-1T	Tygothane	1/4”
-2T	A-002N-2T	Tygothane	3/8”
-3T	A-002N-3T	Tygothane	7/16”
-4T	A-002N-4T	Norprene	1/4”
-5T	A-002N-5T	Viton	5/16”
-6T	A-002N-6T	Norprene	3/8”
-7T	A-002N-7T	Norprene	7/16”
-1Q	A-002N-1Q	Tygothane	1/4”
-2Q	A-002N-2Q	Tygothane	3/8”
-4Q	A-002N-4Q	Norprene	1/4”
-6Q	A-002N-6Q	Norprene	3/8”

Blue-White Industries, Ltd.
5300 Business Drive, Huntington Beach, CA 92649
Tel: 714-893-8529 **Fax:** 714-894-9492
www.blue-white.com **Email:** sales@blue-white.com

All trademarks are the property of their respective owners.

Technical data sheet #85000-039 rev.080905